ECT AND A/T INDICATOR

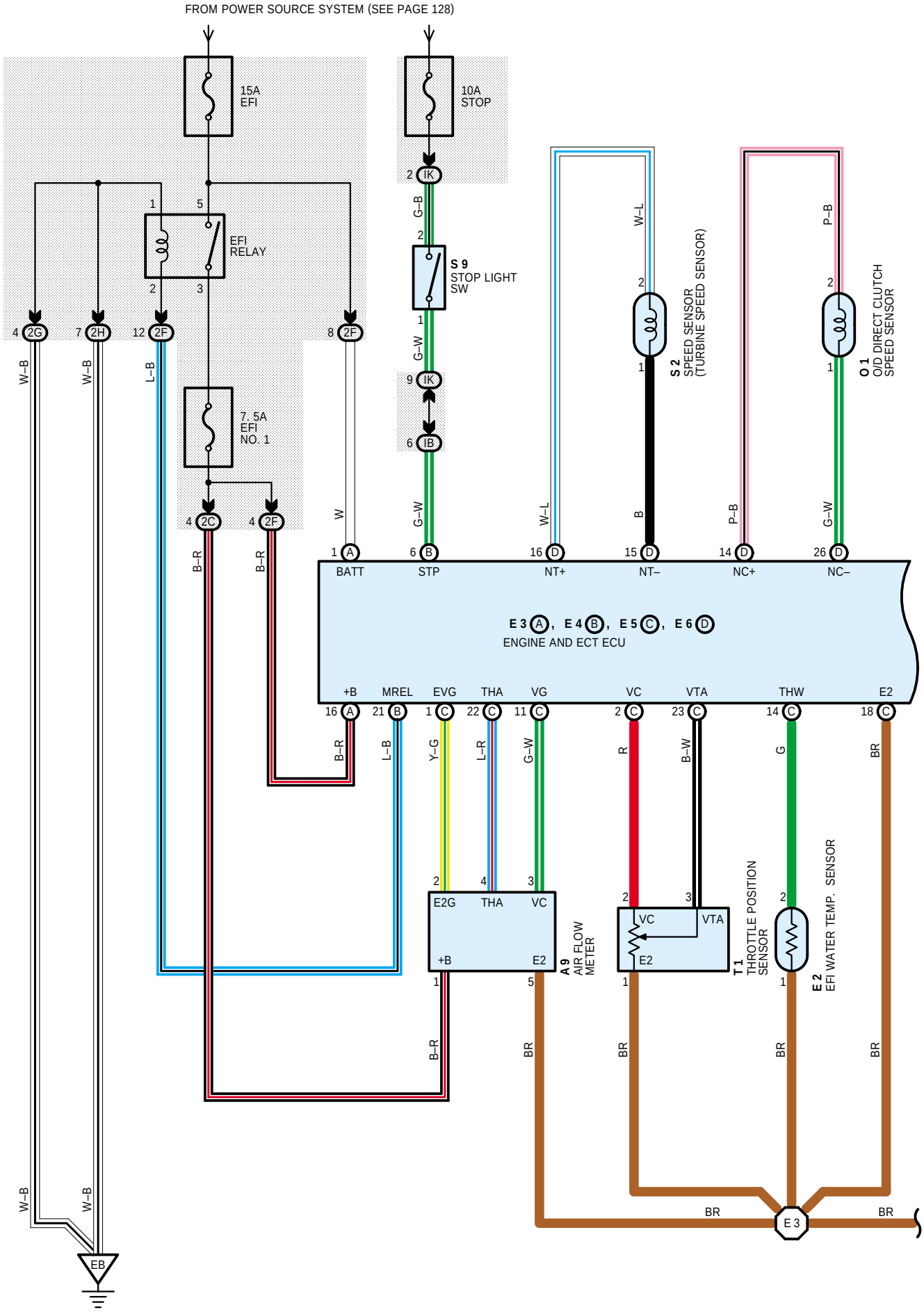

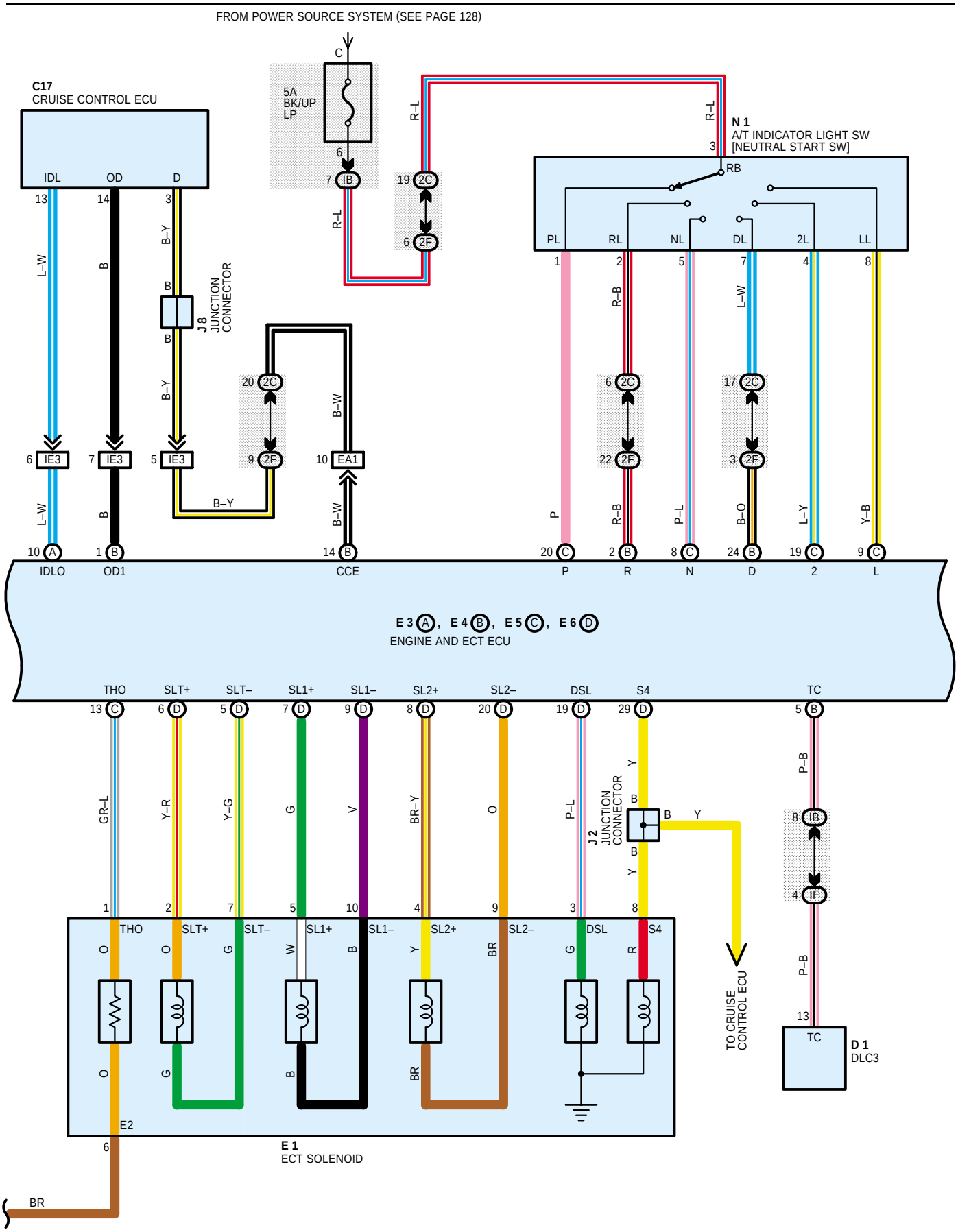
FROM POWER SOURCE SYSTEM (SEE PAGE 128)
C17
CRUISE CONTROL ECU
IDL
OD
D
5A
BK/UP
LP
N 1
A/T INDICATOR LIGHT SW
[NEUTRAL START SW]
RB
PL
RL
NL
DL
2L
LL
J 8
JUNCTION
CONNECTOR
IDLO
OD1
CCE
P
R
N
D
2
L
E 3 A, E 4 B, E 5 C, E 6 D
ENGINE AND ECT ECU
THO
SLT+
SLT–
SL1+
SL1–
SL2+
SL2–
DSL
S4
TC
J 2
JUNCTION
CONNECTOR
TO CRUISE
CONTROL ECU
D 1
DLC3
E2
E 1
ECT SOLENOID
BR

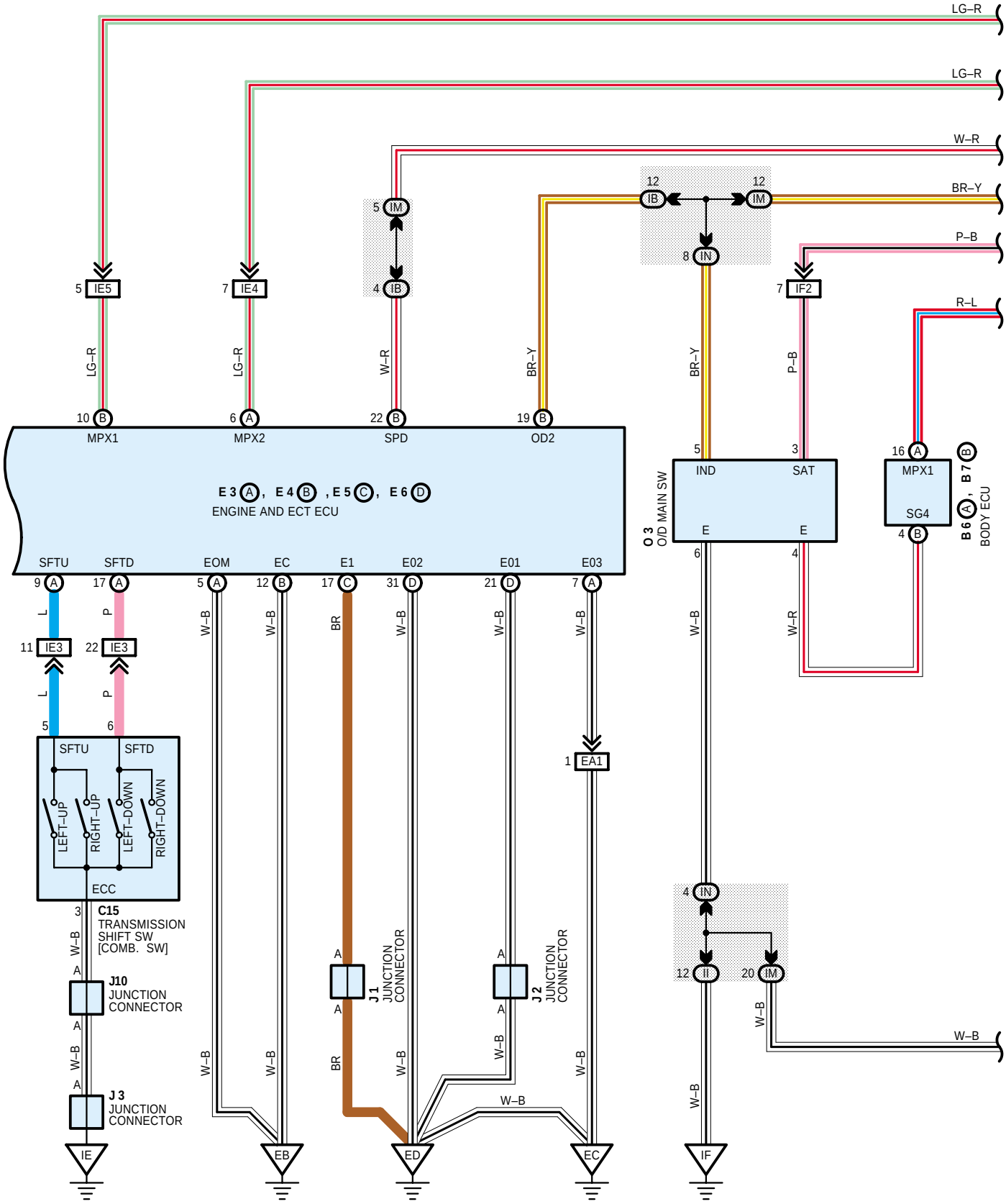
LG–R
LG–R
W–R
BR–Y
P–B
R–L
5 IE5
7 IE4
5 IM
4 IB
12 IB
12 IM
8 IN
7 IF2
LG–R
LG–R
W–R
BR–Y
BR–Y
P–B
10 B
MPX1
6 A
MPX2
22 B
SPD
19 B
OD2
E3 A, E4 B, E5 C, E6 D
ENGINE AND ECT ECU
5
IND
3
SAT
E
E
O3
O/D MAIN SW
16 A
MPX1
SG4
4 B
B6 A, B7 B
BODY ECU
SFTU
SFTD
EOM
EC
E1
E02
E01
E03
9 A
17 A
5 A
12 B
17 C
31 D
21 D
7 A
L
P
11 IE3
22 IE3
5
6
SFTU
SFTD
LEFT–UP
RIGHT–UP
LEFT–DOWN
RIGHT–DOWN
ECC
3
C15
TRANSMISSION
SHIFT SW
[COMB. SW]
W–B
A
J10
JUNCTION
CONNECTOR
J3
JUNCTION
CONNECTOR
BR
J1
JUNCTION
CONNECTOR
J2
JUNCTION
CONNECTOR
1 EA1
4 IN
12 IL
20 IM
IE
EB
ED
EC
IF

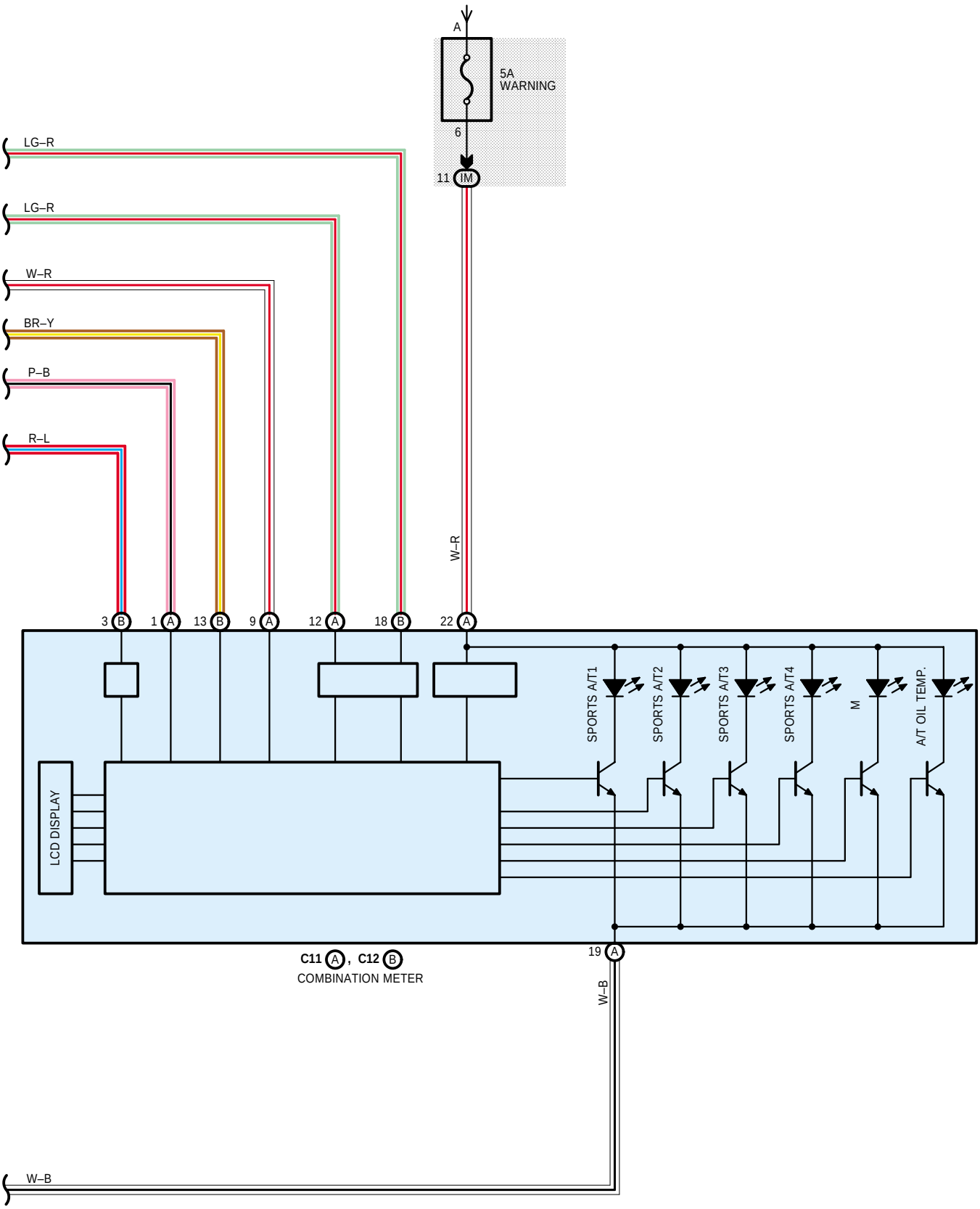
FROM POWER SOURCE SYSTEM (SEE PAGE 128)
A
5A
WARNING
6
11 IM
LG–R
LG–R
W–R
BR–Y
P–B
R–L
W–R
3 B
1 A
13 B
9 A
12 A
18 B
22 A
SPORTS A/T1
SPORTS A/T2
SPORTS A/T3
SPORTS A/T4
M
A/T OIL TEMP.
LCD DISPLAY
19 A
C11 A, C12 B
COMBINATION METER
W–B
W–B